UniRip 310

WEINIG

english

Machine frame

WEINIG technology

Closed frame design

- Frame closed on left side
- Welded construction of laser-cut parts
- Vibration-optimised with FEM analysis

Your advantage

Higher profit thanks to superior cutting quality and better material yield due to smaller cutting dimensions

- 40 % greater rigidity and stability as "open" constructions → superior cutting quality; this enables the pressure unit and the anti-kickback fingers to be supported on both sides
- High production precision → high inherent stability → high cutting → quality up to 10% extended tool life
- Maximum stability for reliability and a long service life

Machine frame

Closed frame design

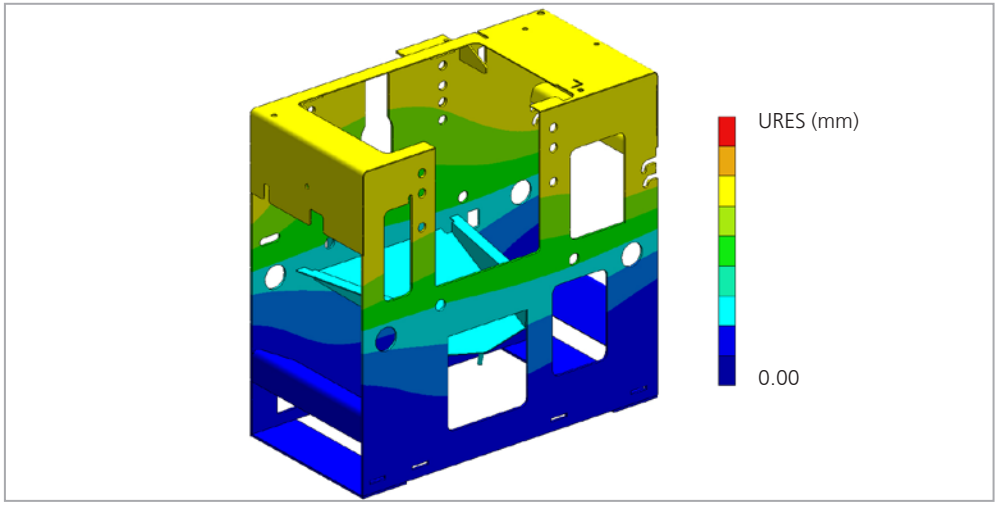

Optimised by means of FEM analysis

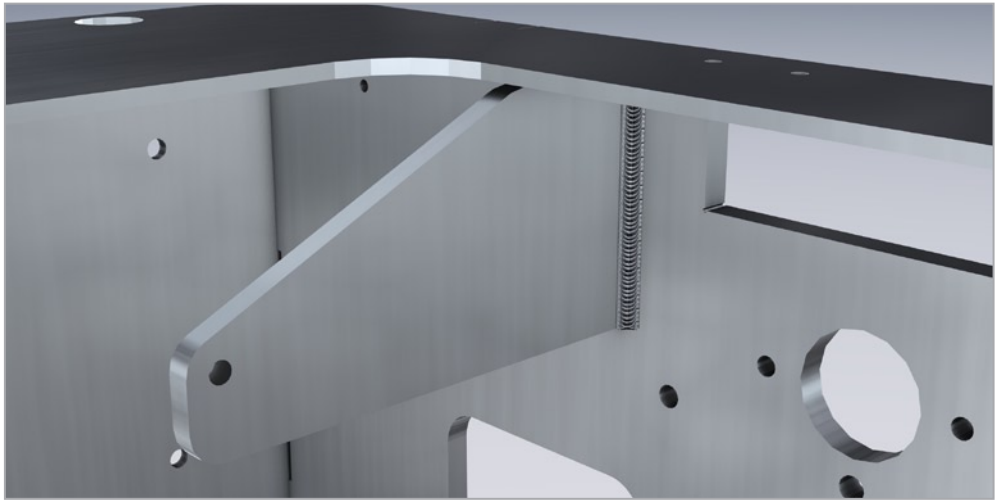

Welded construction

Feed system

WEINIG technology

Chain feed

- Feed by means of a chain
- Prismatic guides on both sides
- Closed chain
- Frequency-controlled feed system
- Chain width 340 mm
- Automatic chain lubrication with monitored filling status and feed shutdown
- Spikes

Your advantage

Greater profit thanks to higher productivity and quality of the sawn products

- Full-surface support of the work piece → the chain moves and not the work piece → that way you have the wood under full control at all times
- Guidance absolutely free of play made from specially matched alloys for a maximal service life → exact material conveyance = prerequisite for a precise cut
- No jammed knots or splinters → high reliability
- Feed speed infinitely adjustable to meet all material requirements → optimal performance
- Larger than the cutting width → all splinters are transported out of the machine → high reliability
- No danger of running dry → easy maintenance → longer chain service life → high operating reliability
- Optimal transportation of raw boards and sawn strips → less stress from the side on the saw blades → greater dimensional accuracy → longer service life → narrower cutting kerfs feasible

Standard Option

Feed system

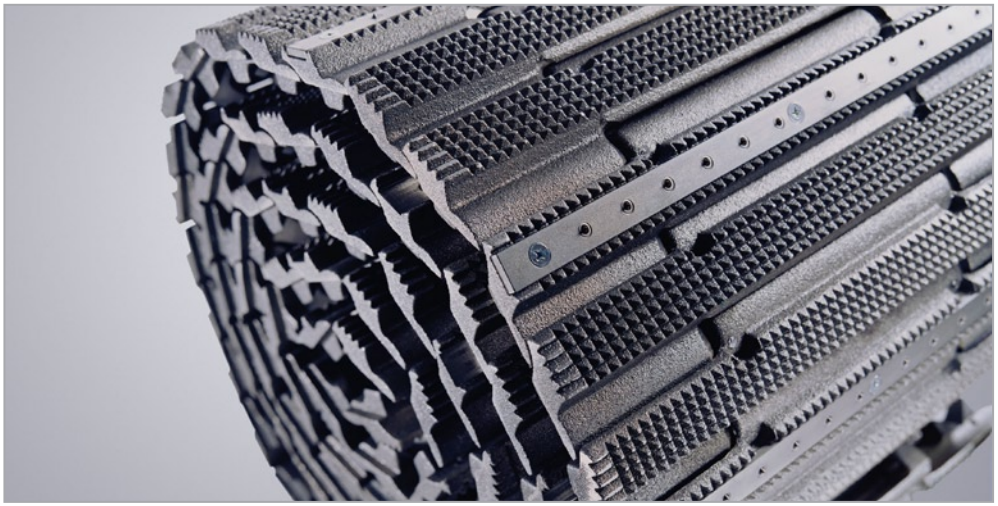

Closed chain

Prismatic guides on both sides

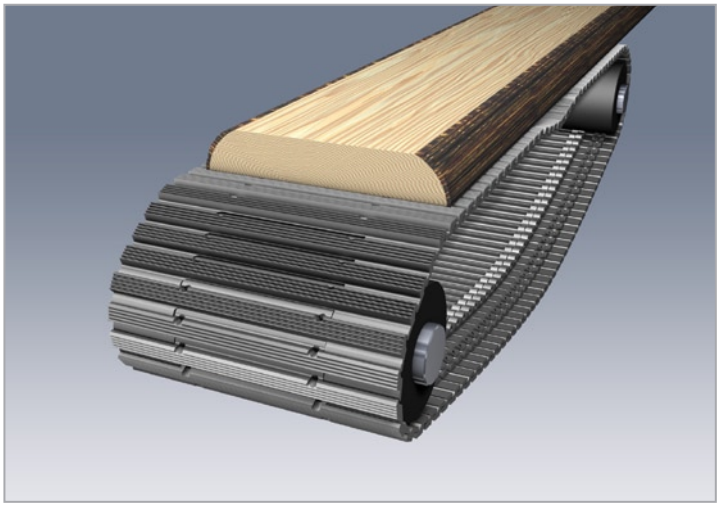

Full-surface support

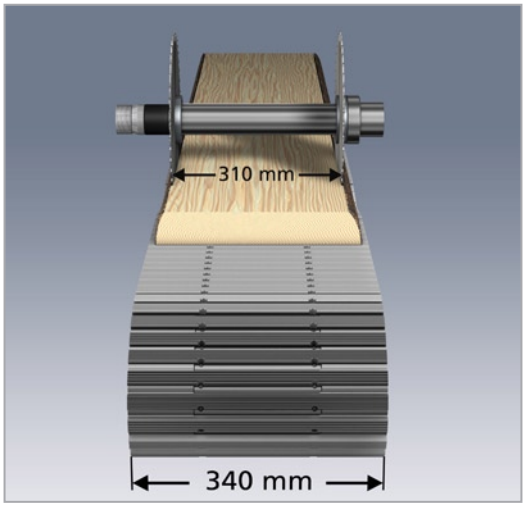

Chain width > cutting width

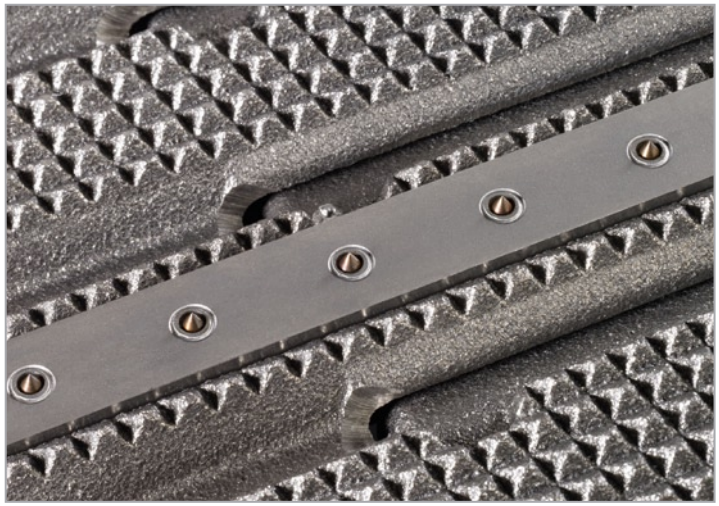

Spikes

Pressure unit

WEINIG technology	Your advantage
■ Supported on both sides of the machine frame	■ 40% more stiffness for optimal cutting quality
■ 4 pressure rollers	■ Reliable material guidance for outstanding cutting results
■ Flat angle of inclination	■ Gentle material infeed and optimised top pressure
■ Motorized height adjustment	■ Easy to operate
■ Double parallelogram movement of pressure rollers	■ Constant small distance between pressure rollers and the saw blades irrespective of the thickness of the timber → optimised pressure
■ Pressure shoe, infeed side	■ Optimal guidance of the timber in the cutting area

■ Standard ■ Option

Pressure unit

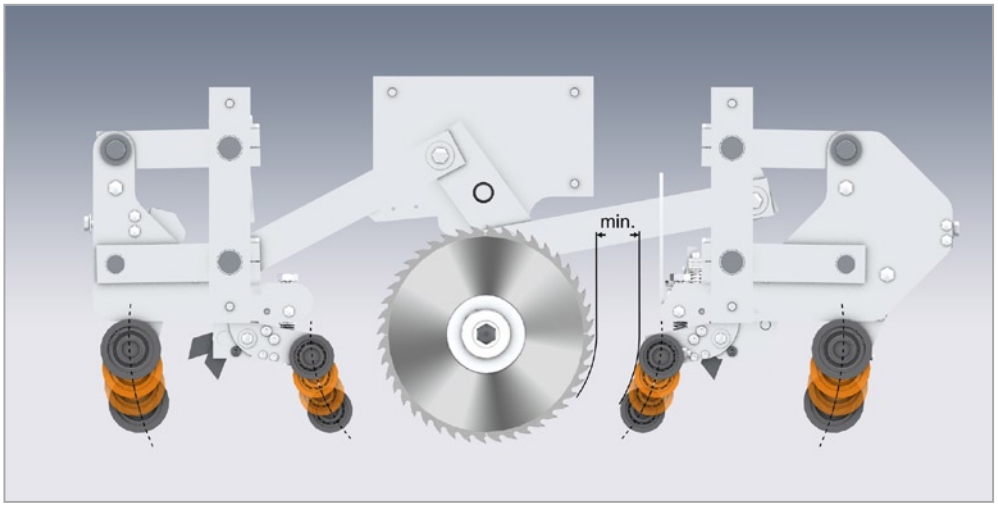

Parallelogram movement of the pressure rollers

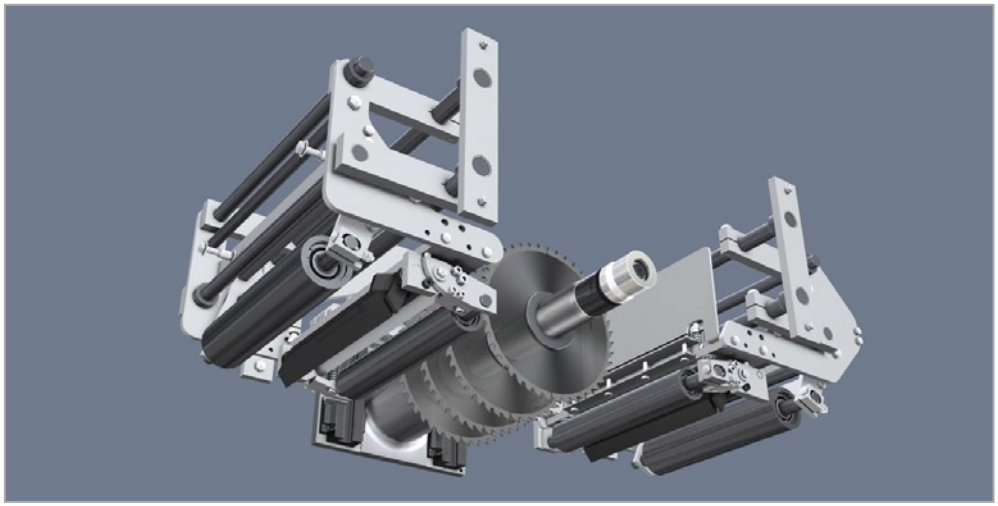

4 pressure rollers

Motorized height adjustment

Pressure shoe, infeed side

Saw arbor

WEINIG technology

Quickfix quick clamping system

- Hydraulic clamping with Quickfix
- Saw arbor made from high strength, low-tension special steel
- High precision angular ball bearing
- Run-in and test cycle for each saw arbor
- Motorized height adjustment

Your advantage

Higher profit due to great flexibility and high productivity thanks to short changeover times

- Simple, fast changeovers without any tools → average time savings compared to conventional sleeves with spacers: 10 minutes at minimum per changeover
- Excellent wear resistance; Quickfix saw arbor patented since 10 years → experience gained from over 2,000 delivered machines
- Quality bearing with long service life for maximum reliability; Special layout for utmost quiet running → little vibration → extended tool life
- Run-in cycle with variable speed and temperature monitoring of the bearings → guarantees long service life → concentricity 0.02 mm → maximum reliability
- Easy-to-operate when changing saw blades; easily adjusted to accommodate new saw blade diameter → saw blades can be moved completely out of the cutting area; high operating reliability thanks to limit switch

Saw arbor

Loosen central nut

Insert wood samples and adjust saw blades

Tighten central nut and remove samples
→ average time saved: 10 minutes per changeover

Motorized height adjustment

Saw arbor set-up

WEINIG technology

Quickfix quick clamping system

- Quickfix clamping flange

- Sleeve and spacers / extended sleeve with spacers

Your advantage

Higher profit due to great flexibility and high productivity thanks to short changeover times

- Fast changeover without tools for gang rip applications
  → high productivity

  Example:
  Changing 5 arbor setups in 1 shift

  Conventional saw with sleeves and spacers:
  On average 10 min per change
  → 5 x 10 min = 50 min per shift

  With Quickfix:
  On average 1 min per change
  → 5 x 1 min = 5 min per shift

  → **Time saved = 45 minutes per shift!**

- Maximum accuracy and cutting height: strips < 25 mm; large series, e.g. middle layer; for pre-sorted ingoing widths

■ Standard ■ Option

Saw arbor set-up

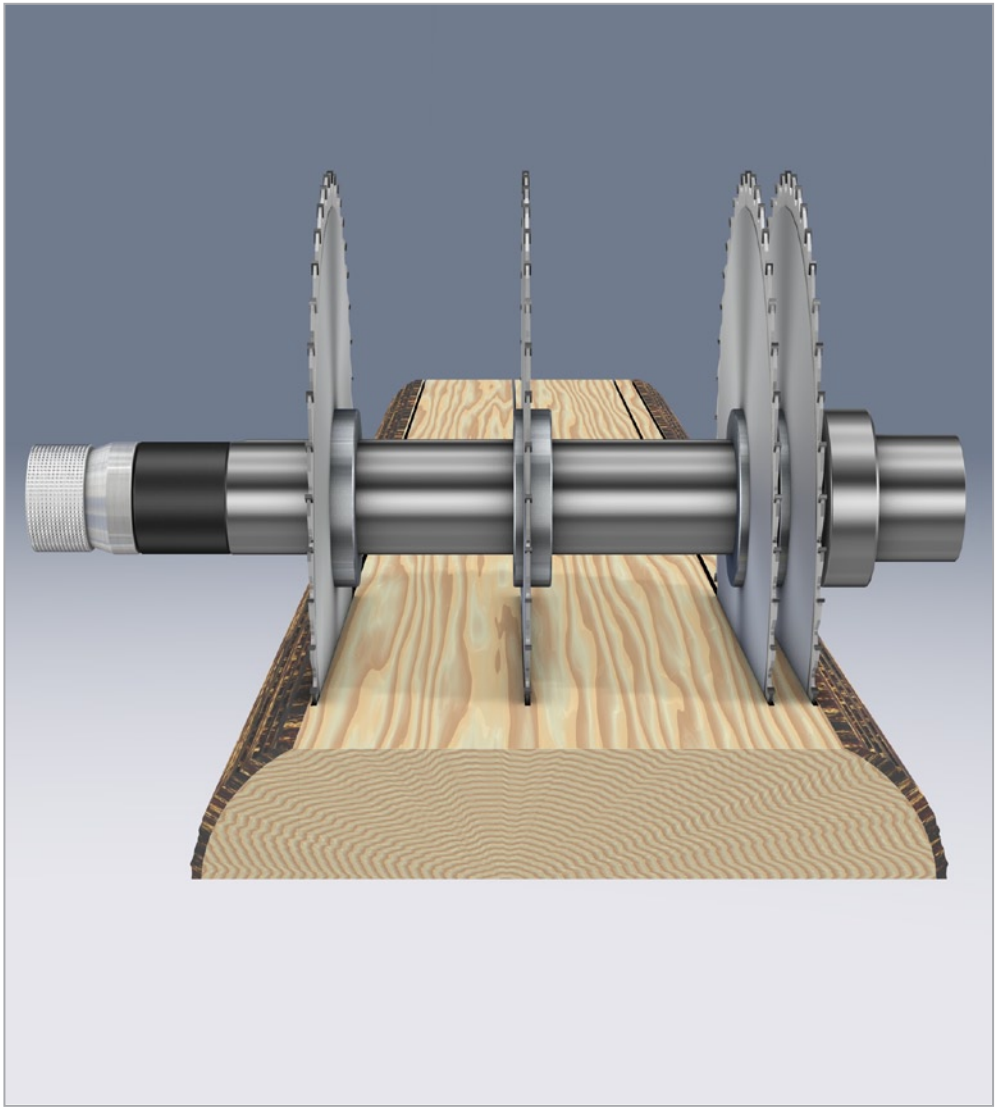

Quickfix clamping flanges

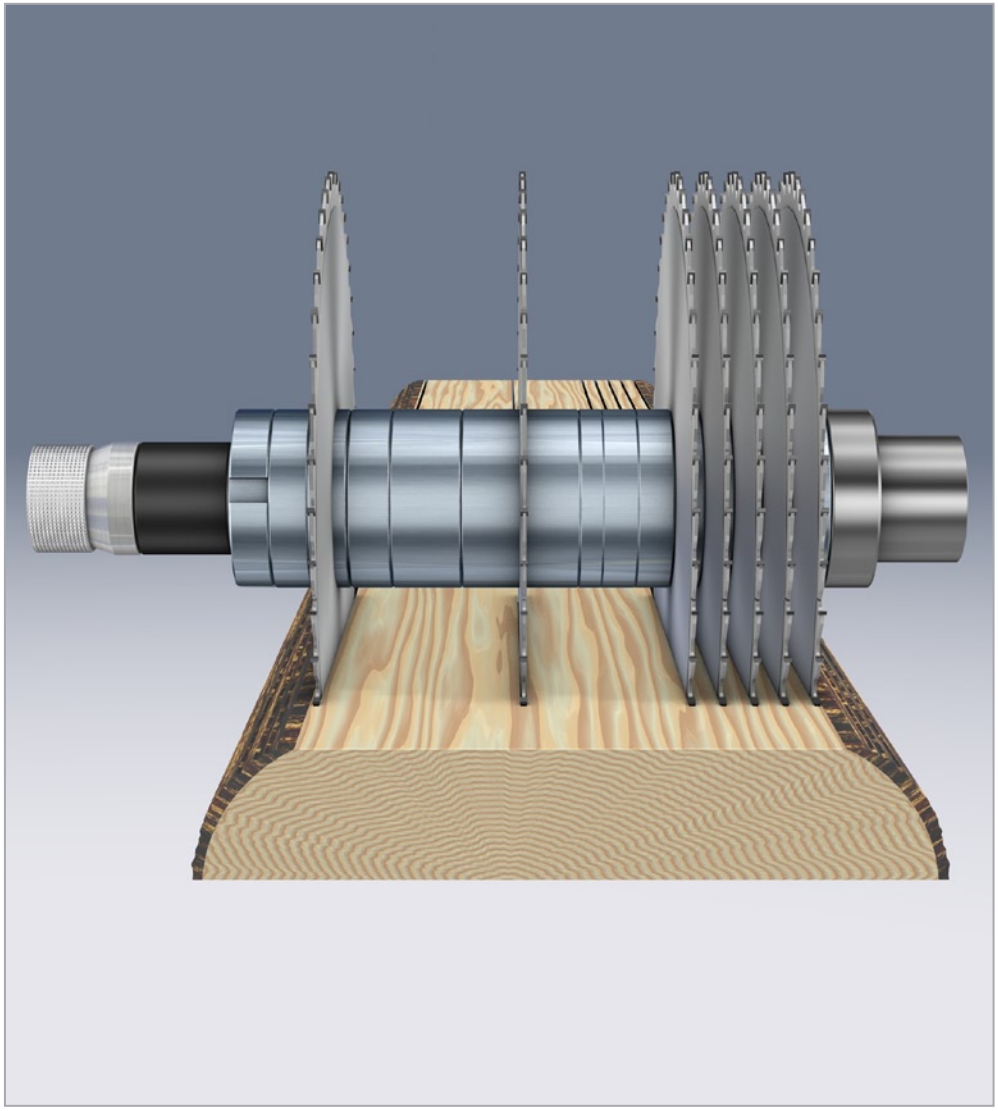

Sleeve with spacers

Machine operation

WEINIG technology

Easy operating concept

- Centrally arranged operating elements
- Limit switches for saw arbor height adjustment
- Laser for cut visualisation
- Infeed fence

Your advantage

More profit thanks to high productivity and reliability

- Easy-to-handle machine; ergonomic arrangement of all important operating elements
- Prevents cutting into the chain; good accessibility of the limit switches for easy adjustment
- See what is being cut → better timber yield; 20 mW output for excellent visibility even in bright surroundings
- Easy infeed of edged and partially-edged boards

Standard Option

Machine operation

Centrally positioned operating elements

Infeed fence

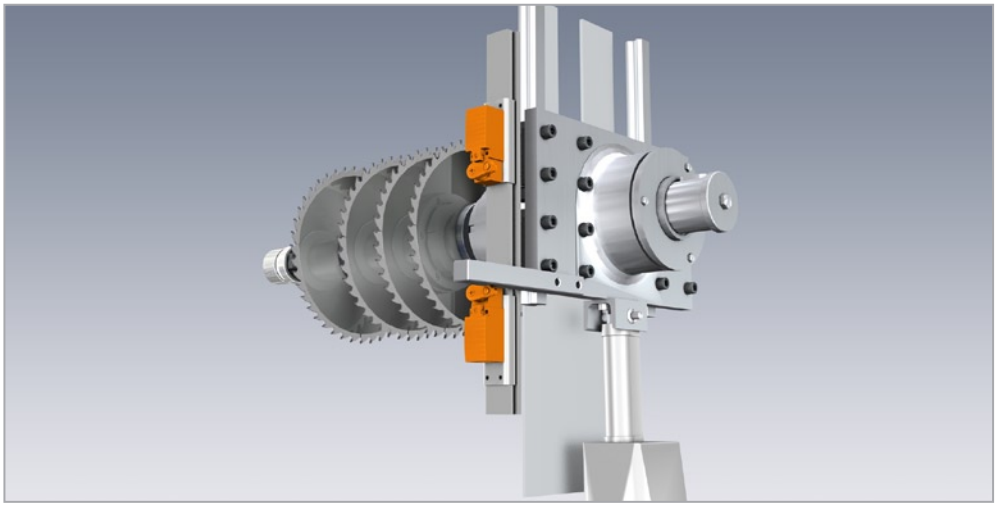

Saw arbor limit switches to protect the chain

Laser – see what is being cut

Machine design

WEINIG technology

Weinig Machinery Directive 2014

- Clever design

  ❶ Saw motor
  ❷ Feed gear
  ❸ Oil pump

  ❹ Saw arbor height adjustment
  ❺ Limit switches for saw arbor height adjustment
  ❻ Pressure unit height adjustment
  ❼ Oil reservoir with monitored filling status

- Energy-saving motor in compliance with IE 2 standard

- Flow-optimised dust extraction

Your advantage

Higher productivity thanks to reduced fitting and maintenance times

- Good accessibility, easy operation, adjustment and maintenance

  ❶ Energy-saving motor in compliance with IE 2 standard
  ❷ Energy-saving motor in compliance with IE 2 standard
  ❸ Consumption-controlled lubrication
  → high operating reliability
  ❹ Easy operation by push-buttons
  ❺ Simple to adjust → prevents sawing into the chain
  ❻ Easy operation by push-buttons
  ❼ No danger of running dry → high operating reliability

- 92.5% efficiency → up to 15% less power consumption at the same output → lower operating costs; lower connected load required

- Highly efficient dust extraction → less energy required; higher productivity thanks to reduced cleaning requirements; improved cutting results

■ Standard ■ Option

Machine design

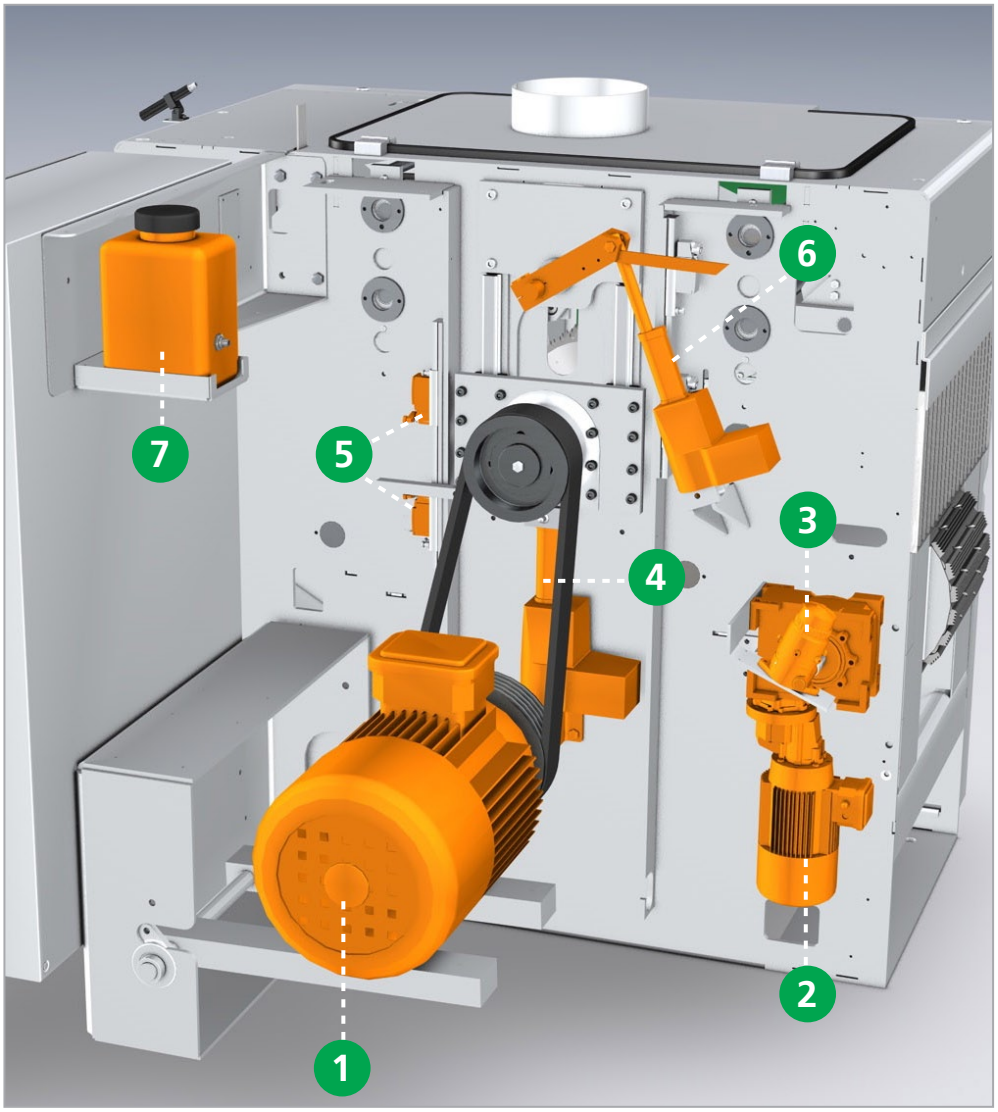

Machine design

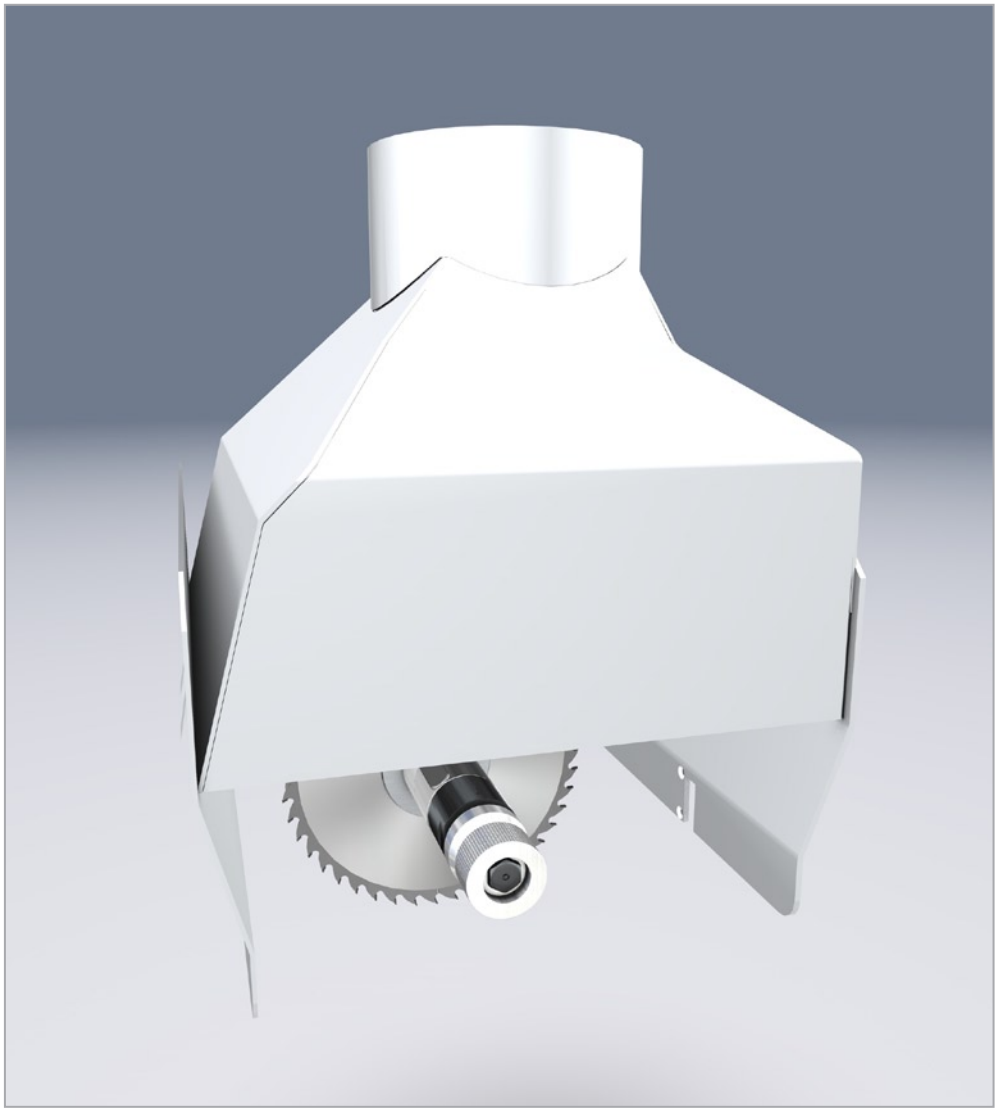

Flow-optimised dust extraction

Safety

WEINIG technology

Multiple kickback protection

- Comprehensive kick-back and splinter protection
- SafetyPlus INSIDE
- Low noise level
- Hood lock with standstill monitoring of the saw arbor
- CE safety certificate issued by independent test institute

Your advantage

Maximum operator safety

1. Bottom row of anti-kickback fingers for a minimum of 30 mm overlap
2. Anti-kickback fingers for splinters
3. SafetyPlus to seal the cutting area
4. Row of anti-kickback fingers prevents raw material kick-backs
5. A row of anti-kickback fingers on the outfeed prevents the sawn material from falling apart, especially the thin splinters

- Kevlar and polyurethane curtain to seal the cutting area, a Raimann patent!
- Sound emission only 76.6 dB(A) in idle operation
- Access protection
- Maximum safety guaranteed when operating the machine

■ Standard ■ Option

Safety

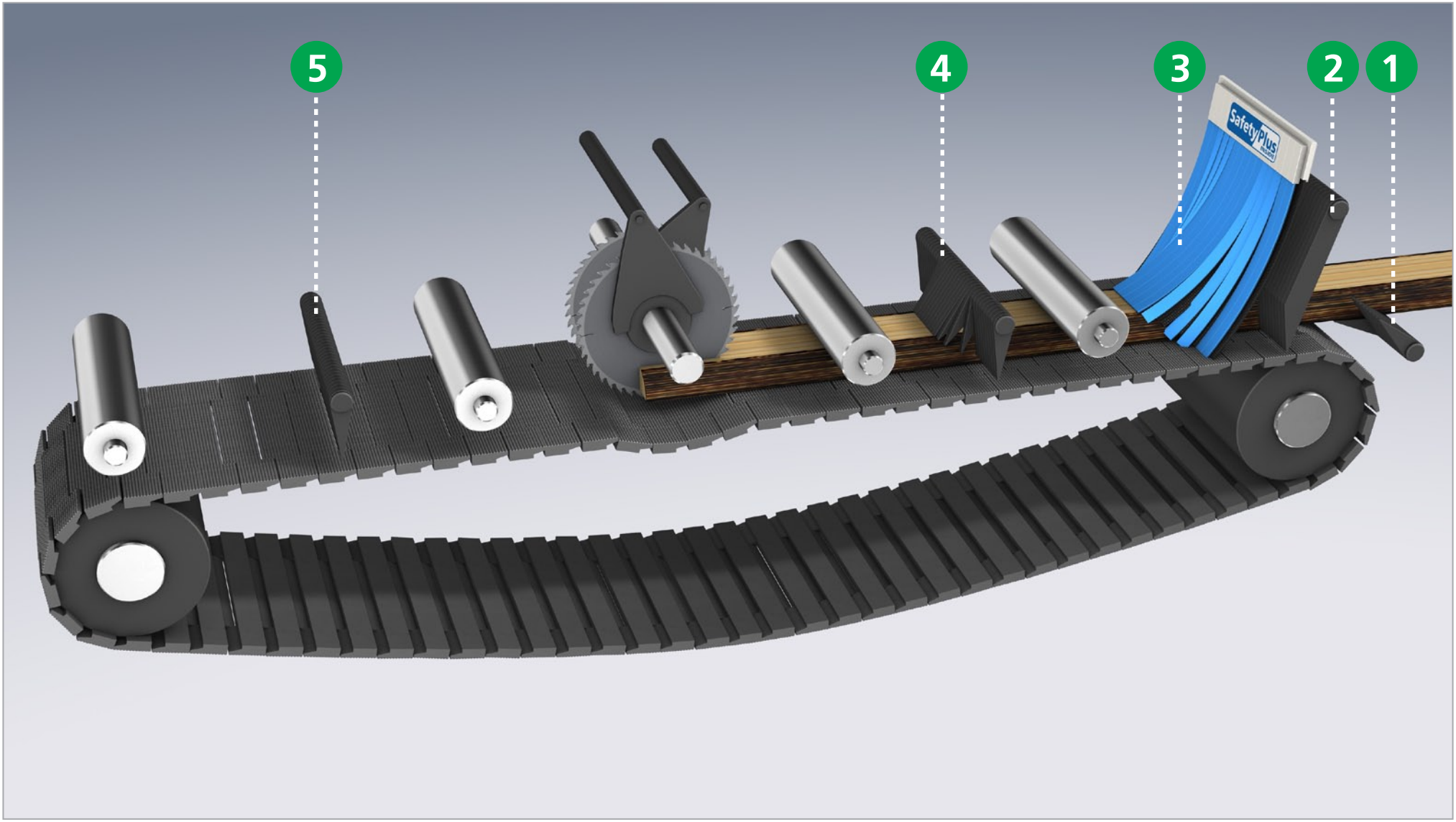

Multiple kickback protection

Technical data / standards / options

Max. cutting width	310 mm
Chain width	340 mm
Max. outlet width	650 mm
Max. cutting height with Quickfix flanges	110 mm
Min. timber length	500 mm
Feed speed	5 - 35 m/min
Motor power (option)	22 (37) kW
Saw blade diameter min./max.	300 mm / 350 mm
Weight	1,850 kg
Dimensions: length x width x height	1.75 x 1.75 x 1.50 m
Working height	850 mm
Dust extraction diameter	250 mm
Required dust extraction volume	5,300 m³/h
Quickfix incl. 4 clamping flanges and 4 saw blades	■
Motorized height adjustment of saw arbor	■
Motorized height adjustment of pressure unit	■
Operating Manual / Spare parts lists	■
Set of tools	■
Spikes	■
Infeed fence	■
Laser cut visualisation	■
Sleeve and spacers	■
Pressure shoe	■

■ Standard ■ Option

Technical data

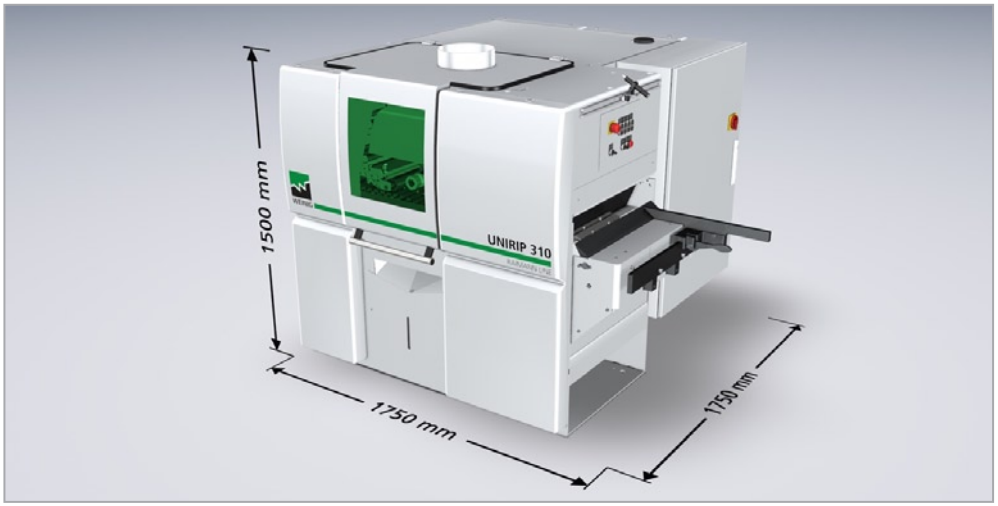

Dimensions

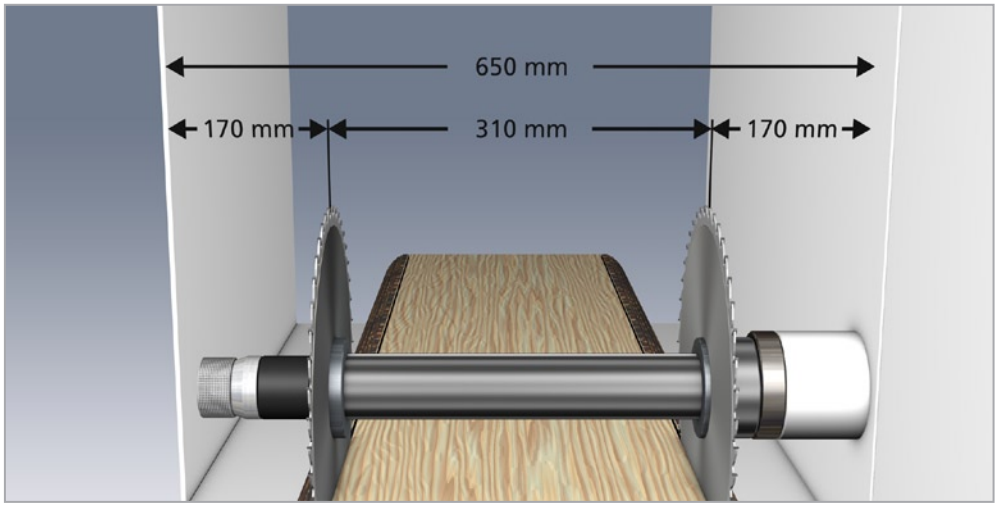

Cutting width - outlet width

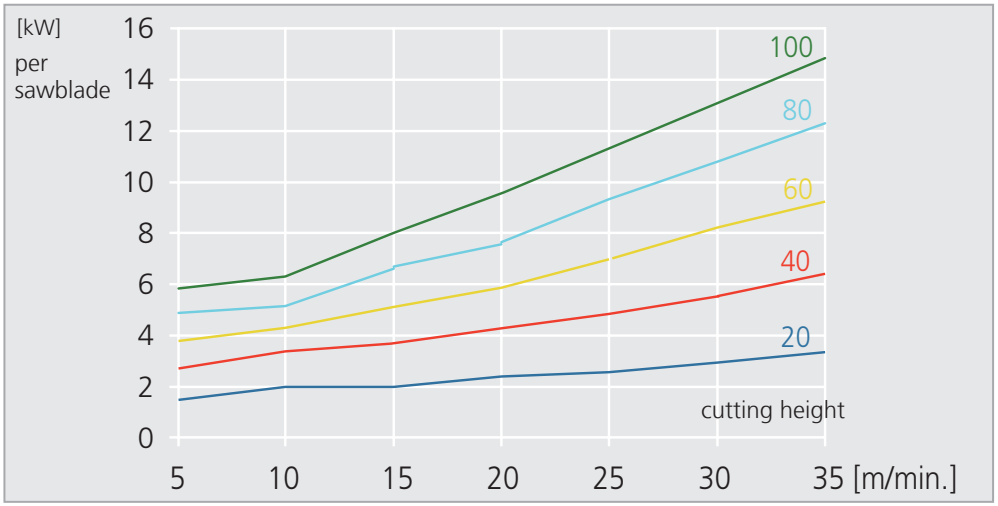

Required motor power for dry hardwood (e.g. beech)

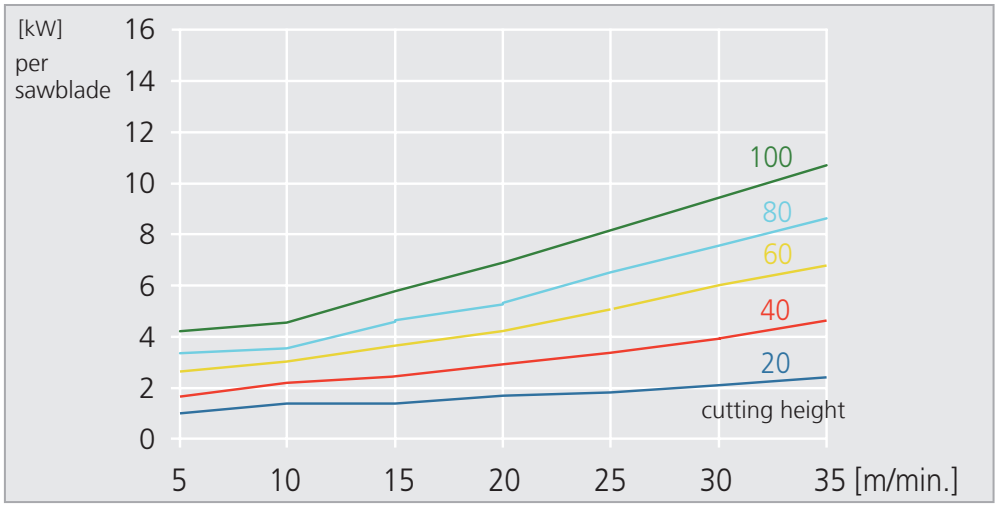

Required motor power for dry soft wood (e.g. pine)

Production:
RAIMANN Holzoptimierung GmbH & Co.KG
Weisserlenstrasse 11
79108 Freiburg
Germany

Telephone +49 (0) 7 61 / 13 0 33-0
Fax +49 (0) 7 61 / 13 0 33-17
e-mail info@raimann.com
Internet www.weinig.com

Sales:
MICHAEL WEINIG AG
Weinigstrasse 2/4
97941 Tauberbischofsheim
Germany

Telephone +49 (0) 93 41 / 86-0
Fax +49 (0) 93 41 / 70 80
e-mail info@weinig.de
Internet www.weinig.com

05.11/ST/ENG